Vapor Monitoring Project Test Plan	Document No.: TP-71248-~~01~~ 001 02 5/2/18 Rev. No.: 0

Title: PNNL Assessment of NUCON Vapor Abatement Unit for Single-Shell Tank (SST) Farm Off-Gas Chemicals of Potential Concern (COPCs)

Effective Date: Upon Final Signature	
Work Location (Building/Room or "General"):	Q Ave. Pad

Signatures:

Author Kenneth G. Rappé (Print/Sign) 5/2/2018 (Date)

Approval:

Project Manager MJ Minette for Tom Brouns (Print/Sign) 5/1/18 (Date)

Task Manager (Print/Sign) 5/1/18 (Date)

Project QE Kirsten Meier Kirsten Meier (Print/Sign) 5/1/2018 (Date)

WRPS Project Manager George Weeks George Weeks (Print/Sign) 5/2/2018 (Date)

REVISION HISTORY

Revision Number	Effective Date	Description of Change
0	Upon Final Signature	Initial Issue

Table of Contents

List of Figures

List of Tables

I. Overview and Background

The objective of this test plan is to describe the Pacific Northwest National Laboratory (PNNL) activities for the assessment of the NUCON International, Inc. (NUCON) Vapor Abatement Unit (VAU) prototype. Specifically, this plan covers the methodology and approach towards determining the abatement of eleven (11) specific Chemicals of Potential Concern (COPCs) when processed through the VAU.

NUCON has developed a novel toxic vapor thermal oxidation technology. This Test Plan describes the approach that will be used by PNNL to conduct engineering-scale evaluation of the fate of COPCs in the VAU prototype. The purpose of the test is to evaluate the VAU vapor destruction efficiency for a selection of eleven (11) COPCs that have been measured in Hanford High Level Waste (HLW) SST passive breather tank vapor emissions.

The Tank Vapor Assessment Team (TVAT), Wilmarth 2014[1], identified the need to provide engineered controls to protect tank farm workers from toxic organic vapor emissions from Hanford HLW tanks. In response to this need, NUCON presented a proposal to the 2016 DOE-ORP Grand Challenge. This proposal presented a novel thermal oxidation system that is intended to combust HLW tank vapors within an internal combustion engine. This proposal was the Grand Challenge winner. As a result, NUCON has developed a prototype of the proposed system and has conducted proof-of-concept tests. Upon successful completion of this proof-of-concept test, Washington River Protection Solutions (WRPS) has begun preparations for more rigorous engineering-scale testing of the VAU prototype in FY17 and FY18.

Primary risks to this assessment include:

- Interferences from the broad range of exhaust derived compounds that could prohibit the successful analysis of individual COPCs at the concentrations of interest
- Trace level detection below or near the detection limit for the analytical equipment, particularly for the low detection threshold targets for NDMA and Furan
- Extended duration or prohibitively complicated pre-concentration methodology required for low detection threshold compounds, potentially requiring extended lab-scale development
- Challenges with successful liquid vaporization if necessary to meet target COPC concentrations, potentially including COPC degradation with vaporization or incomplete vaporization
- Adverse weather conditions limiting operation or safe access to the test site
- Unpredictable schedule constraints from technical and non-technical sources.

Mitigation approaches are detailed through this test plan, but additional approaches may be necessary based on technical and non-technical drivers. Additionally, mitigation will be necessary if it is determined in the course of method development or testing that the desired detection limits

1 Wilmarth 2014. W. R. Wilmarth, M. A. Maier, T.W. Armstrong, R.L. Ferry, J.L. Henshaw, R.A. Holland, M.A. Jayjock, M.H. Lee, J.C. Rock, C. Timchalk. *Hanford Tank Vapor Assessment Report*, SRNL-RP-2014-00791 Savannah River National Laboratory, Savannah River Nuclear Solutions LLC, Aiken, South Carolina.

will not be achieved using the described analytical instrumentation for one or more COPC. In this case, WRPS will be notified. PNNL will recommend a course of action, such as increasing test condition concentrations, with the concurrence of WRPS.

II. Scope/Intent of the Test Plan

This Test Plan is designed to satisfy the deliverable for "Task 2: Test Plan and Procedures" of "PNNL Support for NUCON Vapor Abatement Unit Testing" WRPS contract number 36437-234 also known as PNNL 71248, which states:

> "Working with TerraGraphics and WRPS, PNNL shall prepare a test plan detailing the tests to be conducted, configuration of the test apparatus, required analytical instrumentation, sampling and analysis plan and data collection systems. Test procedures and run sheets shall be developed as necessary."

The scope of this test plan will cover the work associated with the above referenced project under Task 3 and Task 4, including:

- Design and construction of injection and sampling systems to interface with the VAU
- Development of calibration methods and trace analytical methods to detect COPCs to identified thresholds, nominally 10% of occupational exposure limit (OEL) in an engine exhaust stream
- Bench testing of those methods to detection limit of 10% of OEL
- Mobilization of analytical instrumentation to the VAU test site
- Installation of analytical systems and the injection/sampling systems VAU interfaces
- Shakedown of the injection and collection systems
- Conduct three (3) tests with the VAU being operated by a WRPS subcontractor will all eleven (11) COPCs, to include:
  - Test 1 – COPC injection into the exhaust stream of the VAU to reach 10% OEL and confirmation of its detection
  - Test 2 – COPC injection into the air-intake stream of the VAU to reach 2 x OEL for determining VAU destruction removal efficiency (DRE) for each COPC at that concentration
  - Test 3 (if applicable) – COPC injection into the air-intake stream of the VAU to reach a pre-determined high concentration for determining VAU DRE for the COPC at that concentration
- Sampling of the exhaust stream from the VAU to support the above activities as well as WRPS design and permitting activities
- Data analysis and reporting to calculate the VAU DRE for each COPC at each concentration and to inform WRPS design and permitting activities

III. Test Objectives and Success Criteria

This test plan covers an assessment of the performance of the VAU as operated by WRPS subcontractors. Thus, the test objectives are aligned with developing and validating the analytical methods used to assess the COPC concentrations in the engine exhaust to criteria levels, developing COPC injection and exhaust sampling systems to support VAU testing, and the use of those methods and systems to assess the COPC destruction performance of the VAU. The core scope of this test plan is the determination of the performance of the VAU as an abatement technology and its feasibility to reach specific COPC destruction targets. Also included in this test plan are methods for collecting samples from the VAU process (e.g., sorbent tubes, canister samples or Tedlar® bag samples) to provide secondary confirmation of COPC removal in the VAU and to inform future WRPS design and permitting efforts. This test is not intended to modify or optimize performance of the VAU in an attempt to reach a specific performance target. The test objectives and respective acceptance criteria are presented in Table 1.

Table 1. Test objectives and acceptance criteria

	Test Objective	Acceptance Criteria		
1	Validation of detection of selected COPCs in VAU exhaust at or below the following concentration	CAS	Name	Concentration
		7664-41-7	Ammonia	2.5 ppm
		10024-97-2	Nitrous Oxide	5.0 ppm
		106-99-0	1,3-Butadiene	0.1 ppm
		71-43-2	Benzene	0.050 ppm
		50-00-0	Formaldehyde	0.030 ppm
		75-07-0	Acetaldehyde	2.5 ppm
		110-00-9	Furan	0.00010 ppm
		75-05-8	Acetonitrile	2.0 ppm
		107-12-0	Propanenitrile	0.60 ppm
		62-75-9	N-Nitrosodimethylamine	0.000030 ppm
		108-47-4	2,4-Dimethylpyridine	0.050 ppm
2	Analysis of selected COPCs in the VAU exhaust using the validated method while injecting the "low level" concentration of that COPC	Completed VAU exhaust analysis of each COPC at low level injection to calculate destruction efficiency of VAU		
3	Analysis of selected COPCs in the VAU exhaust using the validated method while injecting the "high level" concentration of that COPC	Completed VAU exhaust analysis of each COPC at high level injection to calculate destruction efficiency of VAU		
4	Calculation of the destruction removal efficiency (DRE) for each COPC in (2) and (3) above	Assess abatement feasibility for each COPC in relation to WRPS target of ≥ 95% DRE and < 10% OEL.		
5	Acquisition of samples from the VAU process (e.g., sorbent tubes, canister samples or Tedlar® bag samples) to provide secondary confirmation of COPC removal in the VAU and to inform subsequent WRPS design and permitting activities	Sample acquisition and data compilation		

IV. Test Plan Methodology

1. COPCs, gases, standards, QA/QC

i. COPC Identification

The eleven (11) COPCs to be employed in the NUCON VAU testing were chosen to adequately represent the worst-case scenario of destruction removal efficiency (DRE) for the different classes of compounds in the Hanford Tank Farm COPC list. The list of Hanford tank farm COPCs includes 61 compounds (see Appendix A) consisting of inorganic compounds, hydrocarbons (primary olefinic-species), alcohols, ketones, aldehydes, furans and substituted furans, phthalates, nitriles, amines, nitrosamines, organophosphates and organophosphonates, halogenated hydrocarbons, pyridines, organonitrites, organonitrates, and isocyanates. The basis for selection of these eleven COPCs are as follows:

- Both ammonia and nitrous oxide were selected as part of the test due to their unique and somewhat unpredictable chemical behavior in combustion and catalytic systems.
- 1,3-Butadiene and benzene were chosen to represent two comparatively recalcitrant hydrocarbon species and aromatic species.
- Formaldehyde and acetaldehyde were both selected to represent the most recalcitrant carbonyl groups, and thus adequately represent ketones as well. Additionally, aldehydes will conservatively predict alcohols as an aldehyde represents a more recalcitrant analog of an alcohol.
- Furan was chosen as the most recalcitrant furanic component.
- Phthalates are comparatively much less stable than benzene. The aromatic ring is the most recalcitrant portion of the phthalate molecule, and thus adequately represented by benzene.
- Acetonitrile and propanenitrile were both chosen to represent the very unique and recalcitrant nitrile-functionality. The nitrile-functionality adequately represents the amine functionality as it is a comparatively more recalcitrant analog.
- N-Nitrosodimethylamine (NDMA) was chosen to represent the nitrosamine functionality. A nitrosamine was chosen because there is not adequate information available to predict how a nitrosamine will decompose in combustion chemistry. With two methyl-groups, NDMA is comparatively more recalcitrant than one or two ethyl groups or a cyclic species which are represented by the other nitrosamines on the COPC list.
- Regarding halogenated hydrocarbons, the presence of a halogen within a hydrocarbon molecule almost always destabilizes that structure within

combustion chemistry. For this reason, halogenated hydrocarbons were not considered for inclusion in this study.

- A pyridine was chosen to represent the unique pyridine aromatic functionality. Since pyridine itself is expected to behave very similar yet slightly less recalcitrant than benzene, 2,4-dimethyl pyridine was chosen for comparison.
- Organophosphates and -phosphonates, organonitrites and –nitrates, and organoisocyanates are all molecules containing hydrocarbon cation complexes and inorganic anions. The very strongly dominating electronic nature of the anionic portion of these molecules dominates their behavior in combustion chemistry and renders them highly reactive and very non-recalcitrant. This knowledge base has been built upon a large amount of vehicle-based combustion chemistry dealing with, for example, phosphate derivatives such as lube oil components and organic sulfates as fuel-derived lubricants.

Table 2 provides a list of the eleven COPCs selected for testing and the Hanford Tank Farm Occupational Exposure Levels ($_{HTF}$OEL or OEL). The tabulated numbering in the table corresponds with the COPC numbering in Appendix A. Note, the CAS numbers referenced in this test plan are considered definitive. Common chemical names are provided only for convenience and readability.

Table 2. COPCs selected for testing

COPC #	Name	CAS #	Formula	$_{HTF}$OEL [ppm]
20	Ammonia	7664-41-7	NH_3	25.
51	Nitrous Oxide	10024-97-2	N_2O	50.
2	1,3-Butadiene	106-99-0	C_4H_6	1.0
21	Benzene	71-43-2	C_6H_6	0.50
30	Formaldehyde	50-00-0	CH_2O	0.30
18	Acetaldehyde	75-07-0	C_2H_4O	25.
31	Furan	110-00-9	C_4H_4O	0.0010
19	Acetonitrile	75-05-8	C_2H_3N	20.
57	Propanenitrile	107-12-0	C_3H_5N	6.0
6	2,4-Dimethylpyridinie	108-47-4	C_7H_9N	0.50
53	N-Nitrosodimethylamine (NDMA)	62-75-9	$C_2H_6N_2O$	0.00030

In this plan, injection of low (baseline) and high injection concentrations is described. Low concentration testing has been set at 2x of OEL since 95% destruction of 2x OEL yields a final concentration below a level of concern (≤10% OEL). The high concentration injection was identified from WRPS as maximum measured headspace concentrations identified in Single Shelled Hanford Waste Tanks.

ii. Identify COPC injection source

1. COPC gas blend options & limitations

   Table 3 identifies the diluted single-component compressed gas bottle (CGB) sources to be used for testing. NIST-traceable certification of the test gases will be obtained from the selected gas vendor and/or a certified analysis laboratory. These concentrations are within the range of durable CGB storage and manageable rates of volumetric delivery to the VAU.

Table 3. COPC single-component CGB sources to be used for VAU testing

COPC Name	CAS #	$_{HTF}$OEL [ppm]	CGB Supply [ppm]
Ammonia	7664-41-7	25	30000
Nitrous Oxide	10024-97-2	50	30000
1,3-Butadiene	106-99-0	1	100
Benzene	71-43-2	0.5	200
Formaldehyde	50-00-0	0.3	30
Acetaldehyde	75-07-0	25	250
Furan	110-00-9	0.001	1
Acetonitrile	75-05-8	20	300
Propanenitrile	107-12-0	6	150
2,4-Dimethylpyridinie	108-47-4	0.5	5
N-Nitrosodimethylamine (NDMA)	62-75-9	0.0003	1

2. COPC injection from liquid source
3. It is not feasible to inject acetaldehyde, acetonitrile, and 2,4-dimethylpyridine from compressed gas bottle sources for the DRE tests 2 and 3 (all COPCs will be injected from compressed gas bottle sources for the 10% OEL exhaust spike). Thus, four (4) tests total will require COPC injection from a liquid source. This will be accomplished in the form of a bubbler in which ultrapure nitrogen will be bubbled through the liquid COPC, reaching a concentration of COPC in the nitrogen purge stream that will approach the vapor pressure of the COPC at the temperature of operation. This technique is within the experience of the team, has been reduced-to-practice in similar applications by PNNL staff, and is integrated in the design of the injection system. QA/QC requirements

   Documentation of test gases will be maintained in project files. Certifications for the calibration gas will be obtained from the CGB vendor or by a certified analysis laboratory.

iii. COPC calibration source

All COPC calibrations will be performed using CGB sources. Table 4 identifies the two (2) multi-component CGB sources to be used for calibration of VAU instrumentation. Certified calibration gases will be obtained from the selected gas vendors or from certified analysis laboratory. The concentrations chosen will allow COPC target concentrations and measurement requirements to be enclosed within a multi-point performance checks or calibration profile without extrapolation.

Table 4. Multi-component compressed gas bottle (CGB) sources for analytical calibration

COPC Name	CAS #	OEL [ppm]	CGB Cal-1 [ppm]	CGB Cal-2 [ppm]	CGB Cal-3 [ppm]	CGB Cal-4 [ppm]
Ammonia	7664-41-7	25	-	-	1260	-
Nitrous Oxide	10024-97-2	50	-	-	-	1260
1,3-Butadiene	106-99-0	1	5.2	5.2	-	-
Benzene	71-43-2	0.5	2.5	2.5	-	-
Formaldehyde	50-00-0	0.3	1.2	1.2	-	-
Acetaldehyde	75-07-0	25	100	-	-	-
Furan	110-00-9	0.001	0.1	0.1	-	-
Acetonitrile	75-05-8	20	80	-	-	-
Propanenitrile	107-12-0	6	24	-	-	-
2,4-Dimethylpyridinie	108-47-4	0.5	5	5	-	-
NDMA	62-75-9	0.0003	0.1	0.1	-	-

Calibration standards will be traceable to the National Institute of Standards and Technology (NIST) or another recognized standard; if traceability to a recognized national or international standard is not available, the technical justification for the standard used will be documented. Records of calibration (e.g. Certificate of Calibration, Certificate of Analysis) will be maintained in project records.

iv. COPC injection volume requirements

The COPC CGB injection volume requirements are shown in Table 5 for the 10% OEL exhaust spike (Test #1), the 2xOEL DRE test (Test #2), and the high concentration DRE test, if applicable (Test #3).

Table 5. COPC CGB-supply injection volume requirements

				Test #1		Test #2		Test #3	
				10% OEL exhaust spike		2xOEL inlet spike *		High inlet spike	
Name	CAS #	OEL [ppm]	CGB supply [ppm]	Target [ppm]	CGB flow [SLPM]	Target [ppm]	CGB flow [SLPM]	Target [ppm]	CGB flow [SLPM]
Ammonia	7664-41-7	25	30000	2.5	0.125	50	1.95	630	24.5
Nitrous Oxide	10024-97-2	50	30000	5	0.249	100	3.89	831	32.4
1,3-Butadiene	106-99-0	1	100	0.1	1.496	3.4	39.7	-	-
Benzene	71-43-2	0.5	200	0.05	0.374	1	5.8	-	-
Formaldehyde	50-00-0	0.3	30	0.03	1.496	0.6	23.4	-	-
Acetaldehyde	75-07-0	25	250	2.5	14.960	50	-**	-	-
Furan	110-00-9	0.001	1	0.0001	0.150	0.002	2.34	0.017	19.9
Acetonitrile	75-05-8	20	300	2	9.973	40	-**	-	-
Propanenitrile	107-12-0	6	150	0.6	5.984	12	93.4	-	-
2,4-Dimethylpyridine	108-47-4	0.5	5	0.05	14.960	1	-**	-	-
NDMA	62-75-9	0.0003	1	0.00003	0.045	0.0006	0.70	0.062	72.4

* Or slightly higher concentration if warranted, as reflected below

** COPC injected from a liquid bubbler

2. Bench-scale analytical development and demonstration

The COPCs will be analyzed by appropriate instrumentation identified in Table 6 that will provide the necessary level of detection in the VAU exhaust stream for real-time analysis. The methods used for analysis of each COPC will be developed and verified on the bench-scale in PNNL laboratory space.

Table 6. COPC low detection limit target instrumentation for real-time analysis

COPC	CAS	Target Instrument	Notes
Ammonia	7664-41-7	FT-IR	
Nitrous Oxide	10024-97-2	FT-IR	
1,3-Butadiene	106-99-0	PTR-MS	
Benzene	71-43-2	PTR-MS	
Formaldehyde	50-00-0	PTR-MS	
Acetaldehyde	75-07-0	PTR-MS	FT-IR for corroboration
Furan	110-00-9	PTR-MS	
Acetonitrile	75-05-8	PTR-MS	
Propanenitrile	107-12-0	PTR-MS	
N-Nitrosodimethylamine	62-75-9	PTR-MS	May need preconcentration
2,4-Dimethylpyridine	108-47-4	PTR-MS	May need preconcentration

i. Analytical method development for each COPC

1. Proton transfer reaction mass spectrometer (PTR-MS) applicability (e.g., Mass/ion interferences and absolute detection limit)

   Based on previous work at PNNL by Lizabeth Alexander and others (On-line analysis of organic compounds in diesel exhaust using a proton transfer reaction mass

spectrometer (PTR-MS) B.T. Jobson, M.L. Alexander, G.D. Maupin, and G.G. Muntean. International Journal of Mass Spectrometry, Volume 245, Issues 1–3, 1 August 2005, Pages 78-89) using the same PTR-MS being deployed in this project, significant inferences are not expected at the concentration levels being measured for 1,3-butadiene, acetaldehyde, acetonitrile, benzene, or 2,4-dimethylpyridine. However, there is the potential for interference on propanenitrile, and the potential for interferences increases greatly for the compounds at ~1 ppb or less. However, in the previous cited work, a post-combustion oxidation catalyst was not employed. The VAU comprises a post-combustion oxidation catalyst, thus the potential for inferences is reduced but not eliminated.

Matrix interferences in the engine exhaust stream and ultra-trace level detection requirements represent the primary challenges to accurate COPC analysis. Some of the mitigation approaches have been detailed here, but other approaches may be necessary and will be elucidated from bench-scale method development activities and shakedown testing.

2. Low-level concentration requirements – volatile organic compound (VOC) pre-concentration option

   As needed, a cryogenic trap will be included as a pre-concentration option to the PTR-MS to enhance the lower detection limits. Although a variety of pre-concentration approaches can be used, including that described in EPA method TO-12, it is expected that an approach will be deployed similar to that described by Erickson (Matthew Howard Erickson, *Measuring Diesel Exhaust Gas Phase Organics With A Thermal Desorption Proton Transfer Reaction Mass Spectrometer*, A dissertation submitted for the Doctor of Philosophy, Washington State University, July 2013). Liquid nitrogen cryogenic traps that are available from Scientific Instrument Services, Inc. (or equivalent supplier) will be initially pursued for cryogenic pre-concentration.

   Component method development and qualification of the preconcentrator (i.e., cryogenic trap) will be performed early in project as part of the instrument readiness activity and method development. As there are multiple potential options for equipment and operating strategy, qualification testing is necessary to ensure that the range of potential options can be reduced before the design is finalized. As such, this will consist of prototyping and efficacy for meeting the detection limits for the COPCs and conditions that are expected to require preconcentration. Assessment of the prototype will be guided on its ability to release as a bolus a trapped compound, as well as the ability of design and operational methodology to manage water that will be collected during trapping phase. The qualification of a preconcentrator will also be assessed in conjunction with the PTR-MS on the ability of the two to reliably detect the application COPC(s)

at the necessary level(s). As the amount of preconcentration required is not yet known, this design process will be iterative with PTR-MS shakedown with the acceptance criteria of reliable detection of 0.03 ppb NDMA.

3. Fourier-transform infrared (FT-IR) spectroscopy

   FT-IR spectroscopy will be used as primary detection for a selection of COPCs and corroboratory (to PTR-MS) detection for additional COPCs as shown in Table 6. FT-IR spectroscopy will also be used (during shakedown) as primary analysis for a selection of emission criteria pollutants of specific interest to engine exhaust applications, including NO, NO_2, and CO. Vendor-supplied methods and certified calibrations will be used for COPC identification and quantification. Additionally, FT-IR spectroscopy will also be used, as applicable, to assist with the identification of other components in the exhaust stream.

4. Gas chromatography (GC) and gas chromatography/mass spectrometry (GC/MS) option

   GC and GC/MS will be available as option to assist with primary component analysis, chemical interference assessment, and sensitivity improvement. This may include conditioned exhaust being drawn through a Thermosorb/N adsorbent cartridge for NDMA analysis in a manner similar to that described in NIOSH-2522. Although a variety of GC detectors can be used for NDMA determination, GC/MS with chemical ionization and MS/MS will likely be utilized.

ii. Bench-scale simulated COPC test manifold design/assembly

A bench-scale manifold will be built in PNNL facilities based on a graded approach and iterative to prototype functional requirements of the design of the VAU systems. At a minimum, direct supply of metered or diluted test gases and mixtures will be used. However, as complexity is required, slipstream sampling of higher volume gas streams up to simulated exhaust will be considered. With the exception of the interface between the preconcentrator and the PTR-MS, the functional differences between the requirements for the various instrumentation is not expected to be significant. Thus, the various instruments will be able to share a common test manifold without concern for adjustments to the temperature, pressure, or preconditioning of the simulated stream.

iii. PTR-MS, FT-IR, chromatography configuration

In the bench-scale VAU sampling configuration all real-time analytical instrumentation will share a common sample supply loop analogous to envisioned deployment shown in Figure 3, including the PTR-MS, FT-IR, GC/MS, and the PID. The PTR-MS interface will consist of slipstream sampling using existing sampling interface on the instrument. The interface with the preconcentrator will likely be a direct replacement to the existing

where the assembly functions via direct injection into the PTR-MS analogous to how the unit has interfaced with chromatography in prior work.

The FT-IR configuration will be a continuously-purged heated gas cell operating at ambient pressure. The chromatography-based system(s) (e.g., GC/MS and other chromatography potentially employed) will conventional headspace sampling configuration consisting of an actively-purged, switched sample loop that periodically switches to deliver its contents on to the chromatography column for subsequent component elution and analysis.

iv. Calibrations

Calibrations and performance checks will be performed with the CGB standards identified in Table 4. Project files will be maintained that contain certificates of calibration for category 1 M&TE that accompany the equipment and instrumentation used for calibration and testing. Final results will be traceable to these calibrations, performance checks (for category 2 M&TE), and include, but are not limited to: Test gas calibration mix, individual test gases, mass flow controllers used to blend calibration gases, mass flow controllers used to meter test gases into the VAU injection ports, equipment used for volumetric calibration of the mass flow controllers, and thermocouples.

v. Demonstration of low/high concentration detection in an inert background

As part of the laboratory-scale method development and subsequent shakedown, testing will be performed that spans the 10% OEL to the high target injection concentrations identified for the test matrix. As part of the laboratory-scale activity, both dynamic test and detection ranges will be demonstrated both in an inert background and in simulated exhaust.

vi. Demonstration in simulated engine exhaust gas mix

At the bench-scale, a gas sample stream will be prepared that simulates many of the critical elements of an exhaust stream in order to demonstrate instrument performance of the baseline stream as well as COPC-laden streams. These elements include high temperature, high water concentration, high CO_2 concentration, and an oxygen deficient environment.

3. Design of VAU interfaces

Objectives for interface design:

1) Provide a COPC injection system that can deliver measured amounts of COPCs to multiple points on the VAU for CGB and liquid COPC sources.
2) Provide a sampling system to interface with the VAU at multiple locations to inform on overall and component performance, including provisions for effective particulate (i.e.,

soot) filtration, required temperature control, and where necessary highly accurate exhaust and dilute-inert flow control.

3) Provide a data acquisition and control system that can control and record performance of both systems.

A conceptual diagram of the intake air and exhaust handling system for the VAU is shown in Figure 1, and the VAU ports are identified in Table 7 along with their respective function. Note that injection of COPCs for the VAU evaluation, will occur downstream from the MERSORB® unit in SP517-519 as noted in Table 7. The rationale behind this approach is to ensure accurate and timely evaluation of the VAU under equilibrium conditions. Comparatively, if a COPC test gas was to be introduced upstream of the MERSORB® unit, it will result in a non-equilibrium condition to the volume of the MERSORB® unit combined with a transient affinity of the MERSORB® for each COPC. A non-equilibrium condition for an injected COPC would therefore be transient until the free volume was swept and the MERSORB® achieved equilibrium with the COPC. This could extend over hours, perhaps days, prior to reaching equilibration. For this reason, the injection of COPCs will occur downstream of the MERSORB® unit in SP517-519.

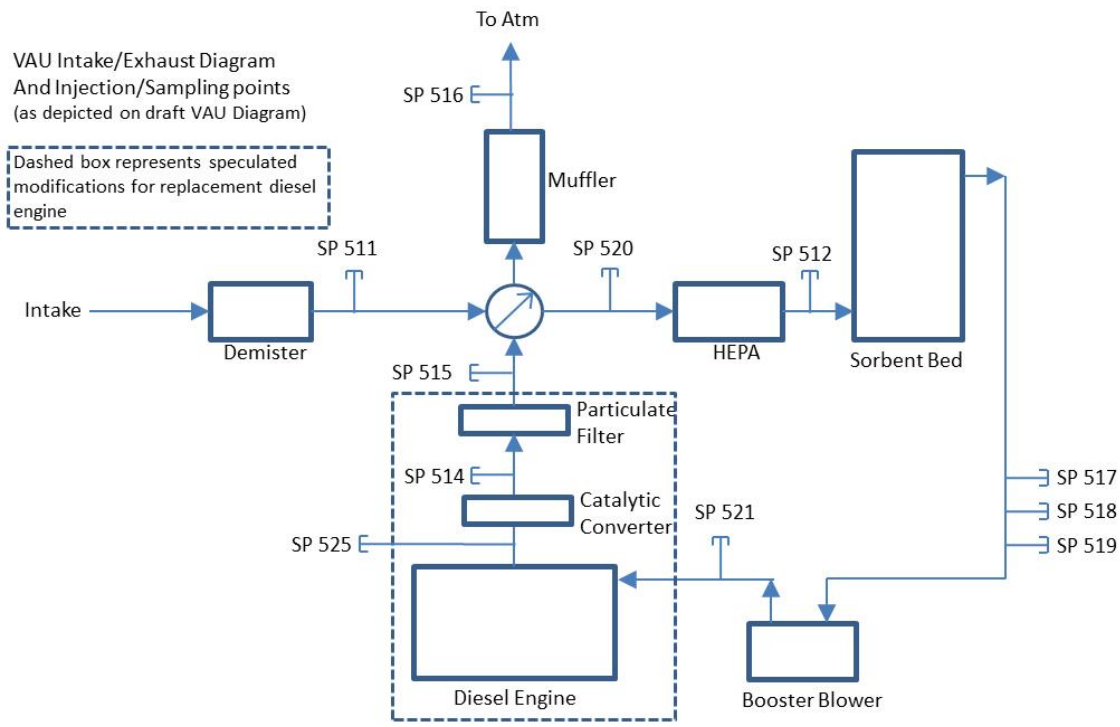

Figure 1. VAU Intake air and exhaust handling system

Table 7. VAU port identification and description of function

VAU Port	Stream	Precedent	Antecedent	Planned Use
SP111	Intake	Demister	Heat Exchanger	Reserved
SP520	Intake	Heat Exchanger	HEPA	Reserved
SP512	Intake	HEPA	Sorbent Bed	Reserved
SP517	Intake	Sorbent Bed	Booster Blower	Injection: Tests #2, #3 (DRE)
SP518	Intake	Sorbent Bed	Booster Blower	Injection: Tests #2, #3 (DRE)
SP519	Intake	Sorbent Bed	Booster Blower	Injection: Tests #2, #3 (DRE)
SP521	Intake	Booster Blower	Engine	Sample: Inlet for Tests #2, #3
SP525	Exhaust	Engine	Catalytic Converter	Component DRE sampling
SP514	Exhaust	Catalytic Convertor	Particulate Filter	Component DRE sampling
SP515	Exhaust	Cat Conv/Filter	Heat Exchanger	Injection: Test #1 (detection)
SP516	Exhaust	Muffler	Exhaust Outfall	Sample: VAU outlet for all Tests

i. COPC injection system(s)

The injection system will be designed to deliver measured amounts of COPC test gases to different points on the VAU depending on the phase of testing. A process flow diagram (PFD) of the COPC injection systems is shown in Figure 2. The test gas injection points will be as follows:

1) Test #1 (demonstration/validation of 10% OEL detection in exhaust) – SP515 immediately after the catalytic convertor.
2) Test #2 and Test #3 (DRE testing) – SP517-519 downstream of MERSORB® unit, but upstream of intake staging pump.

The initial equipment and component considerations including tubing, mass flow controllers, valves, physical support structure, and considerations for control and potentially thermal management. Wetted parts will be purchased in inerted form to minimize unwanted chemistry or retention of compounds on the surface of the injection system. Depending on the selected concentration of the COPC test gases, thermal management (e.g., heat trace/insulation) may also be required to prevent condensation of COPCs during cold weather.

As shown in Figure 2, the injection system will be designed to provide multiple COPC test gases simultaneously manifolded prior to the final injection, with potential consideration for remote switching and purging of the test lines when changing among COPC or between test phases.

Provisions in the design will also be made to provide flow measurement of the inlet air to the VAU and potentially the exhaust stream, via instruments such as an anemometer. In addition, design for temperature and absolute pressure measurement will be made to provide enough data to ensure that a regular, known

amount of COPC are injected during the testing phase that is compensated for by actual and environmental conditions.

Assembly of the system will be performed at the test pad, although some sub-assemblies may be constructed prior to deliver to the site.

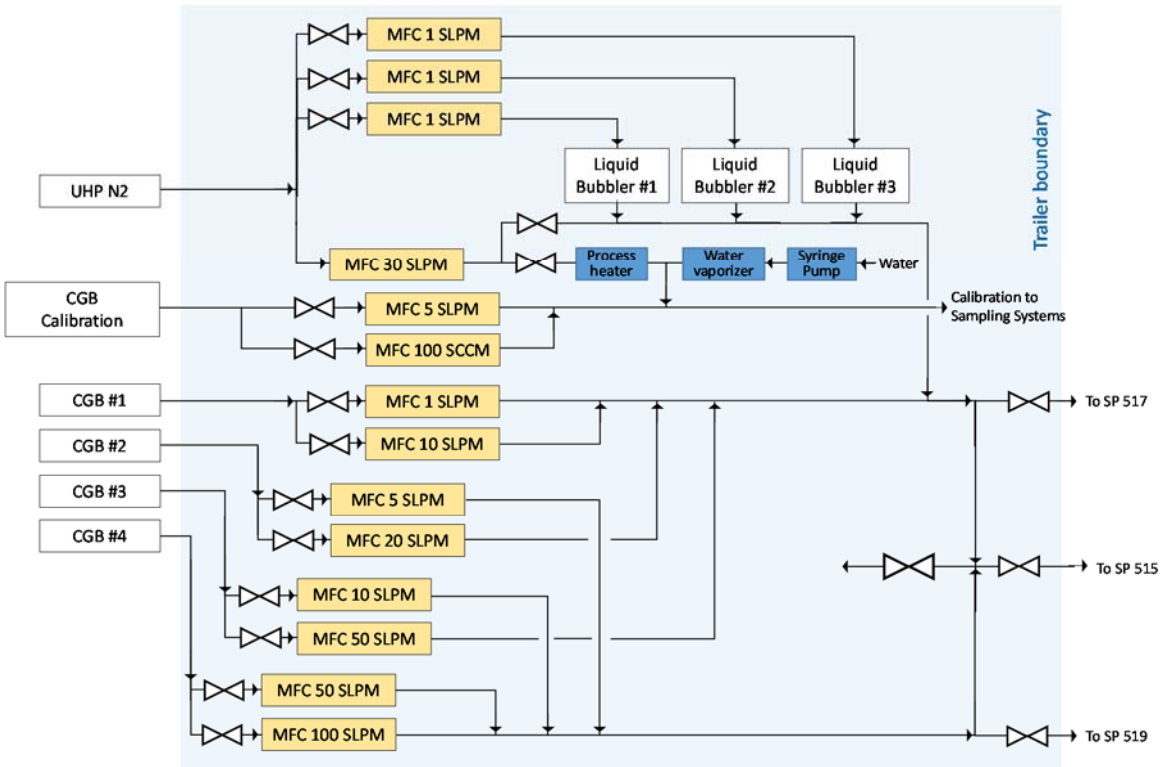

Figure 2. PFD of VAU COPC injection system

ii. Sampling & sample acquisition systems

The PFD for the sample acquisition and delivery system is shown in Figure 3, and is designed to deliver a VAU exhaust stream from one of several sampling ports on the VAU skid. The system will be designed to provide both filtered and conditioned exhaust to the primary analytical systems, and unfiltered exhaust when needed to the particulate analysis system. The system will also be built with provisions to return unused sample to a safe exhaust point. Note that the PTR-MS can be used to successfully analyze unconditioned exhaust, while the other instruments require pre-filtration and will likely share a common filtered sampling train.

The two sampling points required to accurately assess the performance of the VAU are the following:

1) The sample port downstream of the muffler (SP516), which is the source for all exhaust samples. This port will be validated during 10% OEL detection testing prior to use in all phases of DRE testing.
2) The sample port after the booster blower and immediately before the engine (SP 521), which is the sample location for validating the COPC inlet concentration during DRE testing.

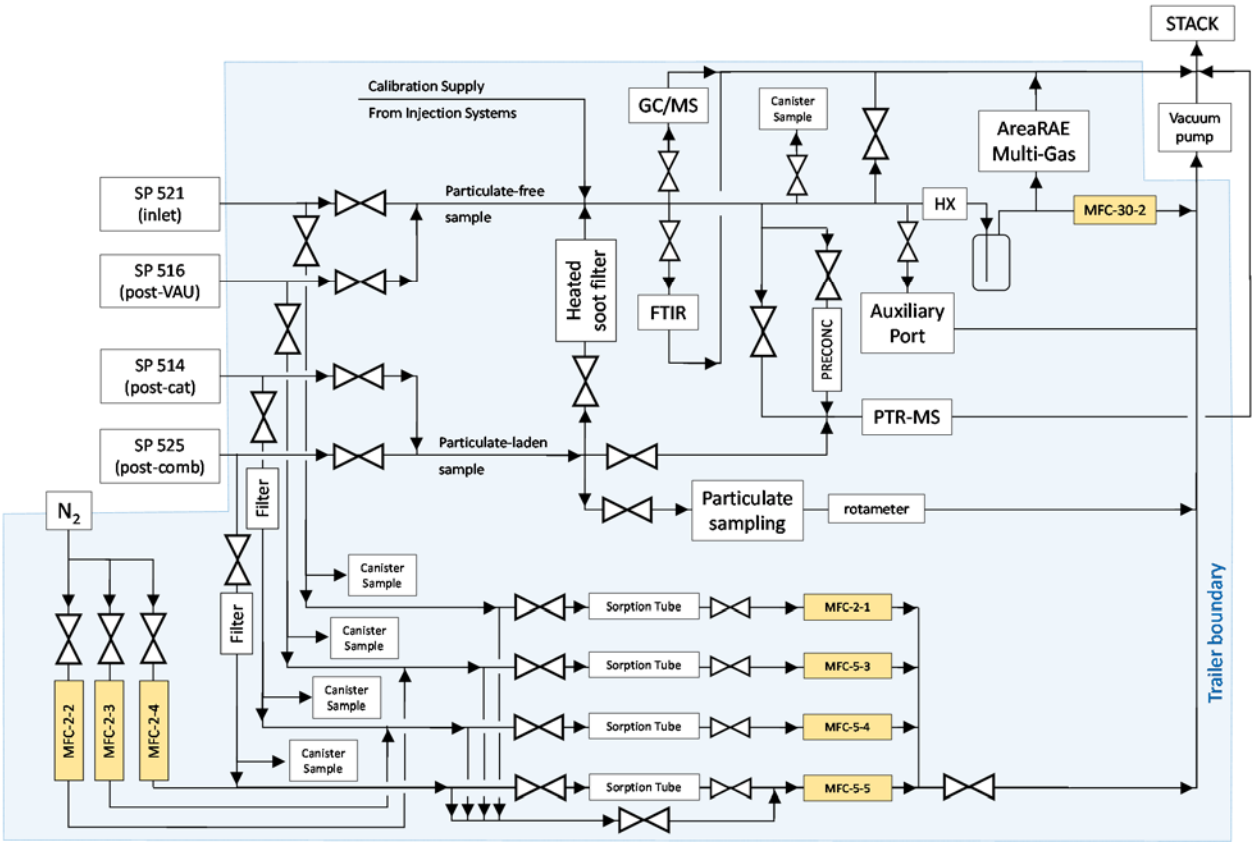

Figure 3. PFD of VAU exhaust sampling system and analytical systems

The exhaust sampling port considerations included the need for a port that would be most representative of the exhaust outfall (i.e., to atmosphere/environment) and the need for at least one upstream port separated by sufficient mixing to be used for injection of test gases for the 10% OEL detection validation. The post-muffler port, SP516, met both criteria as being the nearest port to the stack outfall and being upstream of port SP515 that can be used to inject test gas to achieve the 10% OEL detection validation necessary to demonstrate confidence in sample analysis. SP516 and SP515 are separated by the heat exchanger and the muffler that represent mixing chambers without significant expected changes to or treatment of the compounds represented in the exhaust stream. While the heat exchanger is tube-in-tube the muffler represents a tortuous path to mix the exhaust stream with test gases injected at SP515 prior to sampling.

The other sample point used for this test will be the intake sample port SP521 immediately upstream of the engine. This port will be used to validate the concentration of test gas that is fed to the engine during the DRE testing phases. The SP521 port is downstream of the booster blower, which is downstream of the main test gas inlets (ports SP517, SP518, and SP519). The active operation of the booster blower provides mechanical mixing of the intake stream with the injected test gases in order to provide a representative sample of the intake air to the engine.

A baseline air sample will be collected from intake sample port SP521 prior to injection of test gases. This will provide an accurate baseline of the air that exits the MERSORB® tank and enters the engine.

The sampling system will be designed with particulate management both to protect the analytical instrumentation from particulates in the VAU exhaust, and to determine if the particulate stream contains a measurable amount of COPCs. The particulate management will be configured to allow for switching between filter units as well as recovery of particulates from the filers. Optionally, the particulate sampling may be designed into an alternate system in the event that the conditioning and sampling objectives cannot be combined efficiently into a single unit operation.

Thermal management will be required for the sample streams to ensure that the sample is provided to the analytical instrumentation at an appropriate temperature, nominally ~190°C. Primary considerations for thermal management include temperature compatibility of the analytical instrumentation, and minimization of adsorption or condensation of any exhaust species or reaction product. This will potentially require design considerations for both active heating and cooling (likely passive). Although not expected to be necessary, cooling will likely occur via an uninsulated section of tubing. This will be assessed during shakedown testing to determine the necessity of cool. The active heating will consist of sections of vendor-supplied heated tubing that will be controlled by the data acquisition and control system.

As shown in Figure 3, a primary sample loop will be designed into the system using a vacuum pump to provide a continuous loop of VAU exhaust through the sampling lines and out to a safe exhaust point. This will ensure that sufficient amounts of sample are available in the sampling lines for each instrument to draw upon (actively or passively).

iii. Sampling for off-line analysis

The VAU sampling system also includes the capability for sample acquisition for off-line analysis (i) at SP521 and SP516 for VAU DRE corroboration, and (ii) at SP525 and SP514 for VAU component assessment to support subsequent WRPS design and

permitting efforts (herein referred to as 'engineering samples'). Sample acquisition for each COPC for off-line analysis can come in the form of:

(i) Sorbent tube sample acquisition and analysis by approved method (as detailed in Table 8) and certified lab. This will support analysis of formaldehyde, N-nitrosodimethylamine (NDMA), and ammonia.

(ii) Canister sample acquisition and analysis by EPA method TO-15 and certified lab will support analysis of nitrous oxide, 1,3-butadiene, benzene, acetaldehyde, furan, acetonitrile, propanenitrile, and 2,4-dimethylpyridine.

Overall VAU DRE assessment for each COPC at sample locations SP521 and SP516 will include real-time analysis [by PTR-MS (with or without pre-concentration), FT-IR, GC/MS, or a combination thereof] ***AND*** one method of off-line analysis as described above. VAU component assessment for each COPC at sample locations SP525 and SP514 may include real-time analysis ***OR*** one method of off-line analysis as described above. Thus, only a single analysis (i.e., without corroboration) is required for the engineering samples, and may come in form of (i) real-time analysis by PTR-MS, FT-IR, etc., (ii) sorbent tube, or (iii) canister sample. This means that if time is available during a COPC's VAU test effort to also measure the concentration of that COPC at SP525 and SP514, then engineering samples for that COPC are not required for that test. However, real-time analysis during VAU testing will preferentially prioritize highly confident VAU DRE assessment at sample locations SP521 and SP516.

Solid adsorbents in metal or glass tubes (i.e., sorption tubes) and/or specially-prepared stainless steel canisters designed to collect the relevant COPC samples for each test may be used to collect samples from the engine inlet air, after the engine, after the catalytic converter, and after the particulate filter (i.e., after the VAU). The absorption tubes and/or canisters will be used per the detail shown in Table 8 for required capture media (e.g., sorbent tube type) and analytical method for that COPC. The sorption tube and canister samples will be analyzed by a WPRS sub-contractor (222-S laboratory) with already established analytical methods, protocols and programs. The assignment of field blanks, travel blanks, replicates and duplicate samples will be established in conjunction with a WRPS Certified Industrial Hygienist and manufacture's specification for use prior to the test run. Additionally, the preliminary target collection parameters for sorption tubes (e.g., flow rates) in Table 8 are based on a two hour collection cycle without the addition of nitrogen dilution for moisture control and temperature adjustments. Collection parameters maybe reevaluated with the guidance of a WRPS Certified Industrial Hygienist and the sorption tube manufacture's specification for use in order to adjust collection parameters (e.g., time, flowrate, total volume).

Collection Mitigation Plan for Condensable Gases in the Exhaust

Engine exhaust contains condensable gases (including a significant amount of water) which can result in condensation formation and unknown collection efficiencies when cooling the exhaust to the required temperature for sorbent tube collection. To mitigate this effect, the exhaust gas will be *diluted* to a level where supersaturation of water can be avoided as dilution is the preferred method in most exhaust gas measurements. Any modified collection or analytical procedure will be established in conjunction and agreed upon with a WRPS Certified Industrial Hygienist prior to the test runs. The assumptions that are included with this approach are as follows:

- The standard collection volumes (i.e., sampling times) and analytical methods have been designed to meet the expected detection criteria. Sampling times are shown in Figure 9
- Water management to ~2% molar volume at standard collection conditions is sufficient for the all collection options
- Exhaust dilution is a common and preferred approach for water management during sample collection
    - Water concentration will be measured by the FTIR to confirm that the planned dilution ratio is adequate to avoid a supersaturation scenario (>90% RH) at the collection point.
- Collection flowrates have not changed for outsourced analytical procedures, collection times have been adjusted with increased injection amount options
- Collection flowrates and collection times have increased for thermal desorption tube sampling.

The sorption tube sampling will require a sample temperature that is within an appropriate range per manufacturer recommendations. If dilution will occur, this will be performed hot, and the sample will be subsequently cooled prior to sorbent tube capture by using varying lengths of uninsulated tubing. An appropriate sampling strategy will be identified during shakedown, and the temperature at the inlet of the sorbent tubes will be continuously measured on one channel.

4. Data acquisition (DAQ)/Control systems design

National Instruments LabVIEW will be used as the data acquisition and control system (DAC) and controls systems software platform. LabVIEW is a systems engineering software that is excellent for applications that require test, measurement, and control with rapid access to the hardware and visualization of the process flow diagrams.

This system will be used to control the injection system, the conditioning of the sample stream including temperature of the lines, and important environmental variables.

The system will log the data from the injection and sampling systems in order to provide time comparable information that can be used to support the data generated during testing phases with the other analytical instrumentation. The system will not necessarily be interfaced or be used to collect meta-data on the other analytical instrumentation.

Table 8. Sorption tubes for VAU DRE corroboration and VAU component assessment

COPC	CAS	Sorption Tube Type	Exhaust Volume [L]	Target Flow Rate [mL/min]	Analytical Method
Ammonia	7664-41-7	Anasorb 747 (sulfuric acid), SKC-226-29	24.01+/- 0.70	200	OSHA-ID-188 IC
Formaldehyde	50-00-0	DNPH Treated Silica Gel, SKC-226-119	24.63 +/- 6.57	200	EPA TO-11A HPLC
N-Nitrosodimethylamine	62-75-9	Thermosorb/N	241.48 +/- 9.74	2000	NIOSH-2522 Modified GC-TEA

Table 9. Sorption tube collection times, assuming 2:1 dilution

COPC	CAS	Test	Flow Rate [mL/min]	Inlet Conc [ppm]	Inlet Test Time [min]	Exhaust Conc [ppm]	Outlet Test Time [min]
Ammonia	7664-41-7	Test #2	200	50	45	2.5	135
Ammonia	7664-41-7	Test #3	200	630	45	2.5	135
Formaldehyde	50-00-0	Test #2	200	0.6	20	0.03	60
N-Nitrosodimethylamine	62-75-9	Test #2	2000	0.0006	80	0.00003	240
N-Nitrosodimethylamine	62-75-9	Test #3	2000	0.062	80	0.00003	240

5. On-site deployment of VAU and test equipment

Objectives

1) Install VAU at PNNL's Q Avenue Test Site
2) Safely transport analytical equipment to Test Site
3) Install and mobilize analytical equipment and check functionality
4) Construct injection and sampling systems
5) Install and connect all systems and interfaces

Deployment will consist of 5 phases including preparation of the VAU Test Site, mobilization of analytical systems, installation of analytical systems, installation of the VAU interface, and DAQ control installation.

i. Preparation of VAU Test Site and receipt of VAU

Preparation of the VAU Test Site will occur early in the project. The VAU system will be sited and received at the Q Avenue Test Pad. PNNL staff will work with TerraGraphics staff for the draft siting of the VAU, analytical trailer, electrical distribution, and

interface layout. Use of this space will be subject to PNNL and DOE Pacific Northwest Site Office (PNSO) oversight, as well as the Cognizant Space Manager of this site within the PNNL Integrated Operations System (IOPS) system.

Temporary electrical service will be needed to support the project activities. PNNL will work with TerraGraphics to determine the electrical requirements, and the installation will be designed by PNNL Facilities and Operations (F&O) with input from TerraGraphics and installed by PNNL F&O.

Receipt of the VAU skid will also include initial assessment of any issues related to shipping and transportation of the system. PNNL will request that TerraGraphics examine the system and suggest any repairs or corrections that need to be made. Work that needs to be done on site to correct unforeseen deficiencies will be performed by PNNL and may require modification of the existing scope.

Once the initial site placement is achieved, it will serve as the foundation for design of the VAU interface in other tasks.

ii. Analytical systems stabilization for transport and mobilization

Following successful bench testing, the analytical systems will be prepared for transport to the Q Avenue Test Site.

Stabilization activities for the analytical systems at their existing laboratory will consist of depowering and disconnection. In addition, consumables and typical replacement parts will also be staged for transportation.

Depowering will consist of bringing the system to a safe condition with respect to atmospheric pressure and temperature, and depowering the system. Disconnection of the system will include breaking the interfaces to supply, sampling, and exhaust lines as well as unplugging electrical. In most cases, supply lines will be capped or otherwise obscured for the purpose of preventing inclusion of foreign materials during shipping. If necessary, equipment will be palletized or protected to prevent damage during shipping. Additionally, supply gas, calibration gas, and test gases that were used during bench testing will be disconnected and capped for transport. If existing, additional gases needed for testing will be identified for transport to the Q Avenue Pad.

Analytical systems and supplies will be transported to the Q Avenue Test Site by PNNL transportation. Calibration gases and test gases will be stored and used in accordance with manufacturer instructions.

iii. Analytical systems test site installation

Analytical systems will be sited in the support trailer in pre-identified locations. Gas lines will be connected to the exhaust sampling lines and the systems will be plugged into the electrical service in the trailer. Calibration and test gases will be installed in their primary locations by PNNL crafts. Gas interfaces will be leak checked and the systems will be power tested first, and then a calibration gas or multicomponent test gas will be processed through each analytical system to ensure that the systems are still in working order and the move was completed without negative effect.

iv. VAU interface(s) installation

Installation of the VAU interface(s) will be conducted in two phases, installation and VAU connection.

During the first phase, the VAU injection and gas sampling interface will be installed in place prior to tying into the VAU. This will allow for shakedown testing of the VAU to be performed by WRPS subcontractors independently of the progress of the interface assembly. The systems will be installed per the design from Section 3. Following installation, the injection and gas sampling subsystems will be leak checked.

During the second phase, the injection and sampling interfaces will be connected to the VAU. This will be performed during a narrow window of time to minimize disruption of VAU shakedown activities.

v. DAC/Control installation

Installation of the DAC and Control systems will occur subsequently or simultaneously with the installation of the interfaces. Upon completion of the control system the various sub-assemblies will be tested to ensure proper functionality.

6. Development of Standard Operating Procedures (SOPs) and Training of PNNL and WRPS Subcontractor Staff

Objective: Safe and compliant operations of work under this test plan will be secured by training and qualification of staff.

Standard operating procedures will be developed for the training of the PNNL and WRPS subcontractor staff and to ensure clear guidance during testing.

PNNL and WRPS subcontractors having tasks within this testing scope will be required to complete training to their respective SOPs, have active status for the Test Site in IOPS, and be required to take all training required to operate within PNNL space. Furthermore, each staff member must have a clear understanding of their authorized activities, and remain within those boundaries when at the test site. This will be ensured via pre-job briefings.

7. Shakedown testing

Objectives:

1) Sampling and Injection systems operational
2) Systems demonstrated ready for testing

Shakedown testing of the injection, sampling, and analytical systems will be performed prior to actual testing. Shakedown of the VAU itself, and confirmation of satisfactory operation, is outside the scope of this test plan and will be the responsibility of WRPS subcontractors subject to training, access, and operational requirements summarized in prior sections. This should include shakedown of the diesel generator and each post-treatment component (catalyst, DPF).

Shakedown testing will be to assess the operability of the injection, sampling, and control systems, and to demonstrate the analytical systems and their respective methods with actual VAU exhaust.

i. Engine off

Assessment of the operability of the injection, sampling, and control systems will be performed following design and installation of those systems. This testing will occur independently of engine testing and will not require active participation by engine operators.

1. Injection systems

   The injection system will conduct performance checks on the mass flow controllers and function checks on the valves used to delivering COPCs to the VAU. This will include leak testing up to each respective interface and ensuring proper installation and operation. This will also include testing of any thermal management of the Test Gas CGBs or injection tubing, if applicable.

   The portion of the SOP that covers COPC injection activities will be assessed for adequacy and efficiency of instruction. If necessary, dry runs of specific operational sequences will be performed to assure that the procedures are adequate. These operations may be combined with training of staff on the SOP, but will also likely generate modifications to the SOP.

2. Sample systems & thermal/flow management

   The VAU sampling systems will be tested to ensure proper operation of all components from the VAU interface up to and including the analytical systems. This will include leak checking and functionality assessment of all components (e.g., MFCs, valves, etc.) and pumps, ensuring proper function of the thermal management systems, and independent operation of each of the analytical

instruments' ability to acquire samples from the exhaust supply loop. If necessary, a volumetric simulant may be used to provide the requisite sample exhaust if the nature of the testing or instrumentation requires it.

Similarly, the portion of the SOP that covers COPC injection activities will be assessed for adequacy and efficiency of instruction. If necessary, dry runs of specific operational sequences will be performed to assure that the procedures are adequate. These operations may be combined with training of staff on the SOP, but will also likely generate modifications to the SOP.

3. DAC/Control systems

   Data and control systems for the injection/sampling assembly will be tested for operation, consistency with the SOP, and ability to record and retain required data during testing.

ii. Engine on

Assessment of the operability of the injection, sampling, and control systems will be performed in concert with VAU operation following shakedown of the individual systems. It is expected that by this point, the WRPS subcontractors will have documented procedures, be trained to those procedures, have sufficient training and documentation to work at the Test Pad, and have performed shakedown of the VAU and rendered it fully operational. This will require the WRPS subcontractors to be present and operating the VAU for the duration of the shakedown.

The SOPs for PNNL and each supporting subcontractor will be used for this activity to assess the adequacy of modifications from the shakedown testing, and to ensure that the interface between all supporting personnel and procedures is safe and compliant. As noted prior, this may be combined with training operators on the SOP, but will also likely generate additional modifications to the SOPs.

1. Validation of injection systems

   Testing of the injection system will be performed similarly to prior shakedown with a diluent gas, but with the VAU interface connected and with the engine on. This will include evaluation of the system injection volumes.

2. Validation of thermal/flow sample systems

   The thermal control and flow systems will be tested with actual exhaust from the VAU. This will allow testing of the supply loop as well as the first opportunity to evaluate the system for stable heat management, particularly if active cooling is used. This will also be the opportunity to determine if active cooling will be required for testing. If it is found not to be necessary, the active

cooling will be left in place in the event that environmental conditions will require it.

3. Particulate management

   Effective particulate management of the sampling systems will be assessed by evaluation of the actual VAU exhaust through the sampling system. Sufficient volumes of exhaust will be passed through the filtered sample lines in order to assess the efficacy of the heated particle filter used in the sampling system.

4. Background characterization

   Background characterization of both baseline atmosphere and the VAU exhaust will be performed using each analytical tool that will be employed for COPC testing. This is shown as Test 0.1 and Test 0.2, respectively, in the VAU master text matrix in Appendix B, with the corresponding samples shown in the VAU master sample matrix in Appendix C.

   Tests will be performed using VAU exhaust from the stack sampling port (SP516), and may include VAU exhaust where a diluent stream has been provided to the injection port(s) (SP517-519) on the intake of the VAU downstream of the MERSORB® bed. This will allow the potential baseline concentration of COPCs in the typical exhaust of this system as well as determine if there are potential interferences that remain unaddressed. The testing of the baseline atmosphere at SP521 will also be performed to establish baseline concentrations of COPCs above their detection limit in the intake of the engine. No testing with injection of test gas COPCs will be performed at this stage.

   During background exhaust characterization, if one or more of the 11 target COPCs listed in this test plan are detected above the 10% OEL threshold in the baseline exhaust, then its presence and concentration will be noted and WRPS will be notified to evaluate any warranted modifications to the test procedure. Additionally, if one or more of the 11 target COPCs has an interfering chemical that proves to be prohibitive to effective PTR-MS COPC measurement, it will be necessary to implement mitigating steps that may include GC/MS analysis or GC-assisted PTR-MS.

8. COPC DRE Testing

Objectives:

- Demonstrate detection of each COPC in the VAU exhaust stream to 10% OEL

- Measure COPC concentration at the VAU inlet and VAU outlet for VAU DRE assessment, and acquire samples (sorbent tube or canister) for off-line analysis for corroboration
- Provide means for determining COPC concentration at post-engine and post-catalyst locations by either on-line analysis or sample acquisition (sorbent tube or canister) for off-line analysis

Testing of the COPC in the VAU and associated sampling systems will be performed in two phases:

1. Post-combustion injection (Test #1) using single-component COPC CGB blends, and
2. Pre-combustion injection (Tests #2 and #3) using either single-component COPC CGB blends or COPC delivery from a liquid bubbler.

The planned testing approach is to test 1 to 3 COPCs simultaneously to facilitate extended duration analysis dwell times for maximizing signal-to-noise ratio. This will allow highly efficient comparison of the signal with and without the COPC injection. This strategy is useful for quantification of ultra-trace level COPC to a high-confidence level. Additionally, the use of gas chromatography/mass spectroscopy (GC-MS) in parallel with the PTR-MS will further support these conclusions.

i. Post-combustion COPC injection for analytical sensitivity validation (Test #1)

Table 10 shows the tests for Test #1, the post-combustion COPC injection to 10% of the OEL for validation of COPC detection in the engine exhaust. The test number in Table 10 corresponds to the respective test number in Appendix B and the corresponding sample detail in Appendix C. These tests are performed to demonstrate the detection efficacy of the real-time sampling and analysis system under operating conditions. For these tests, SP515 is used to inject single or groups of COPCs to a 10% OEL target for each COPC, and SP516 is used to obtain the exhaust sample. Sample acquisition for off-line analysis is not performed during these tests.

Table 10. Test #1 – 10% of OEL detection/validation

10% of OEL in exhaust COPC detection/validation						
Test	CAS	Name	Conc.	Target Instrument	Inj.Port	Samp.Port
1.1	75-07-0	Acetaldehyde	2.5 ppm	PTR-MS or FTIR	SP515	SP516
1.1	75-05-8	Acetonitrile	2.0 ppm	PTR-MS or FTIR	SP515	SP516
2.1	71-43-2	Benzene	0.050 ppm	PTR-MS	SP515	SP516
2.1	107-12-0	Propanenitrile	0.60 ppm	PTR-MS	SP515	SP516
3.1	106-99-0	1,3-Butadiene	0.10 ppm	PTR-MS	SP515	SP516
3.1	50-00-0	Formaldehyde	0.030 ppm	PTR-MS	SP515	SP516
3.1	108-47-4	2,4-Dimethylpyridine	0.050 ppm	PTR-MS	SP515	SP516
4.1	62-75-9	N-Nitrosodimethylamine	0.030 ppb	Precon/PTR-MS	SP515	SP516
5.1	110-00-9	Furan	0.10 ppb	Precon/PTR-MS	SP515	SP516
6.1	7664-41-7	Ammonia	2.5 ppm	FTIR	SP515	SP516
6.1	10024-97-2	Nitrous Oxide	5.0 ppm	FTIR	SP515	SP516

The concentrations of 10% OEL shown in Table 10 represent the target detection thresholds for each COPC to a 90% statistical confidence. Experience with the PTR-MS has demonstrated sensitivity to ~0.1 ppb for each COPC in the absence of specific interferences. This suggests that pre-concentration of 10x will likely be relied upon to achieve the target concentration for NDMA listed in Table 10 , and potentially relied upon for Furan. However, it is expected that pre-concentration will not be required for other COPCs. This will be evaluated during method development for a simulated stream, and then established as part of Test #1.

Each of the analytical instruments will be employed to analyze only their target subset of the full COPC list during the post-combustion testing. Test log books will be used to record the initiation time and date of testing activities such that the data from the various systems will be matched to the specific tests. For each s for a specific set of COPCs for the 10% OEL exhaust detection/validation, the following steps are anticipated to be taken:

1) Staff will perform pre-job and system readiness check.
2) Analytical equipment will be warmed up, calibrated/checked, and baseline air sampled as needed. Some of this may be concurrent with VAU startup and warmup.
3) The VAU system will be started and operated to steady state conditions.
4) The steady state baseline exhaust profile will be captured at the stack exhaust sampling port (SP516) prior to COPC injection.
5) Measurements will be taken on the exhaust to calculate the amount of COPC test gases required to be injected to achieve the target concentration in the exhaust stream. Refer to the testing matrix in **Error! Reference source not found.** above.
6) The injection system will be brought online to provide nominally one to three target COPCs at 10% OEL concentration in the exhaust stream using the post-catalytic converter port (SP515).
7) A series of samples will be taken with the target analytical equipment, depending on the target COPCs used. Analysis will be performed up to 5 to 10 times per set.
8) The injection of the COPC test gas will be stopped.
9) Calibration of the instrument will be re-verified and logged.
10) If needed, upon achieving steady state after stopping the final injection, the baseline exhaust and/or baseline air may be checked.
11) Systems will be shut down assuming testing consumes a full day.

The results of Test #1 for each COPC will be documented.

ii. Pre-combustion COPC injection for DRE evaluation (Test #2 & Test #3)

Test #2 and #3 will be performed to determine the efficacy of the VAU for destruction of COPCs under the defined operating conditions, and to inform subsequent WRPS design and permitting activities. For Tests #2 and #3, SP517 and SP519 will be used to

inject COPCs. Testing will be performed at 2xOEL concentration in Test #2 for each COPC as detailed in Table 11. The test number in Table 11 corresponds to the respective test number in Appendix B and the corresponding sample detail in Appendix C. On-line analysis will compare the results from SP521 (VAU inlet) to SP516 (VAU outlet) to determine a DRE for each COPC using the target instrument identified in Table 11.

Testing will be performed at a high concentration level in Test #3 for a selection of the COPCs as detailed in Table 12. Similarly, the test number in Table 12 corresponds to the respective test number in Appendix B and the corresponding sample detail in Appendix C. On-line analysis will compare the results from SP521 (VAU inlet) to SP516 (VAU outlet) to determine a DRE for each COPC using the target instrument identified in Table 12.

Samples will be acquired for off-line analysis at SP521 and SP516 for VAU DRE confirmation (to on-line analysis) in the form of either sorption tube (per the detail in Tables 8 and 9) or canister samples. Additionally, engineering samples will be acquired at SP525 and SP514, in the form of on-line instrumentation, sorption tube samples, or canister samples. Finalization of the test matrix (Appendix B) and sample matrix (Appendix C) will be completed following bench-scale analytical testing and VAU shakedown testing. Controlled copies of these tables will be flowed down to finalized procedures and run sheets.

Table 11. Test #2 –2xOEL intake concentrations for DRE assessment

2x OEL Intake Concentration COPC Testing						
Test	CAS	Name	Conc.	Target Instrument	Inj.Port	Samp.Port
1.2	75-07-0	Acetaldehyde	50 ppm	PTR-MS	SP517-9	SP516
1.2	75-05-8	Acetonitrile	40 ppm	PTR-MS	SP517-9	SP516
2.2	71-43-2	Benzene	1.0 ppm	PTR-MS	SP517-9	SP516
2.2	107-12-0	Propanenitrile	12 ppm	PTR-MS	SP517-9	SP516
3.2	106-99-0	1,3-Butadiene	2.0 ppm	PTR-MS	SP517-9	SP516
3.2	50-00-0	Formaldehyde	0.60 ppm	PTR-MS	SP517-9	SP516
3.2	108-47-4	2,4-Dimethylpyridine	1.0 ppm	PTR-MS	SP517-9	SP516
4.2	62-75-9	N-Nitrosodimethylamine	0.00060 ppm	Precon/PTR-MS	SP517-9	SP516
5.2	110-00-9	Furan	0.0020 ppm	Precon/PTR-MS	SP517-9	SP516
6.2	7664-41-7	Ammonia	50 ppm	FTIR	SP517-9	SP516
6.2	10024-97-2	Nitrous Oxide	100 ppm	FTIR	SP517-9	SP516

Table 12. Test #3 – High intake concentration for DRE assessment

High Intake Concentration COPC Testing						
Test	CAS	Name	Conc.	Target Instrument	Inj.Port	Samp.Port
-	75-07-0	Acetaldehyde	<test not required>			
-	75-05-8	Acetonitrile	<test not required>			
-	71-43-2	Benzene	<test not required>			
-	107-12-0	Propanenitrile	<test not required>			
-	106-99-0	1,3-Butadiene	<test not required>			
-	50-00-0	Formaldehyde	<test not required>			
3.3	108-47-4	2,4-Dimethylpyridine	<test not required>			
4.3	62-75-9	N-Nitrosodimethylamine	0.062 ppm	Precon/PTR-MS	SP517-9	SP516
5.3	110-00-9	Furan	0.017 ppm	Precon/PTR-MS	SP517-9	SP516
6.3	7664-41-7	Ammonia	630 ppm	FTIR	SP517-9	SP516
6.3	10024-97-2	Nitrous Oxide	831 ppm	FTIR	SP517-9	SP516

Destruction removal efficiency (DRE) will be calculated on the actual exhaust profile from the VAU, nominally without subtraction of the target compound even in the event that it is present in the baseline air or in the baseline exhaust. The DRE is calculated as follows:

$$1 - \frac{[Concentration\ of\ COPC\ in\ exhaust]}{[Concentration\ of\ COPC\ in\ intake]}$$

DRE does not compensate for compounds that are produced from the engine (i.e., without injection) nor does it compensate for COPC present in the baseline air. Thus, this may potentially result in an apparent lower destruction efficiency if the COPC is formed by the engine in combustion. In extreme cases, this could result in a negative DRE.

In cases where an interfering component (i.e., not the COPC) is identified in the PTR-MS data, the DRE may require background subtraction of the non-target-COPC interference in addition to a larger number of analyses to confidently quantify the remaining target COPC in the exhaust above the signal from the interference.

Each of the analytical instruments will be employed to analyze only their specific subset of the full COPC list during the post-combustion testing. For each set of tests for a specific set of COPCs, the following steps are anticipated:

1) Staff will perform pre-job and system readiness check.
2) Analytical equipment will be warmed up, calibrated/checked, and baseline air as needed. Some of this may be concurrent with VAU startup and warmup.
3) The VAU system will be started and operated to steady state conditions.
4) The steady state baseline exhaust profile will be captured at the stack exhaust sampling port prior to COPC injection at SP516.

5) Measurements will be taken on the intake to calculate the amount of COPC test gases required to be injected to achieve the target COPC concentrations in the intake stream. Refer to the testing matrices.
6) The injection system will be brought online to provide nominally one to three target COPCs at the indicated concentrations in an intake injector port downstream (after) the MERSORB® bed, nominally SP517 through SP519.
7) Concentration of the injected COPC mix in the intake will be analyzed at SP521. This represents the actual concentration of COPC for calculations.
8) A series of samples will be taken with the target analytical equipment, exact configuration depending on the target COPC and the concentration. Analysis will be performed up to 5 to 10 times per set.
9) The injection of the COPC test gas will be stopped.
10) Calibration of the instrument will be re-verified and logged.
11) If needed, upon achieving steady state after the stopping the final injection, the baseline exhaust and/or baseline air may be checked.
12) Systems will be shut down, as testing evolution is expected to consume a full day.

iii. Multi-component DRE testing

At the conclusion of Test #3, a multi-component DRE test will be performed on a sub-set of COPCs as shown in Test 7.1 in Appendix B, with the corresponding sample detail provided in Appendix C. This test is intended to assess the relation of COPC DRE to the presence of a different combinations and concentrations of other COPCs. It is a single test using only on-line analytical instrumentation with no sample collection for off-line analysis.

9. System Stabilization

Upon completion of testing, all PNNL instrumentation and equipment will be brought to a stable condition suitable for extended-duration storage or moving to another PNNL facility. This may include disconnection and capping of interfaces to the VAU, the injection system, the sampling system, other instruments and/or utility interfaces.

Some provisions will also be taken for weatherproofing PNNL instrumentation, up to and including temporary removal, in order to maintain the equipment in good working order during unattended periods at the test site.

In addition, utility gases and gases used for testing and calibration will be disconnected and stored in a safe configuration.

10. Quality Assurance

The Pacific Northwest National Laboratory (PNNL) Quality Assurance (QA) Program is based upon the requirements as defined in the United States Department of Energy (DOE) Order 414.1D, Quality Assurance, and 10 CFR 830, Energy/Nuclear Safety Management, Subpart A,

Quality Assurance Requirements. PNNL has chosen to implement the following consensus standards in a graded approach:

- ASME NQA-1-2000, Quality Assurance Requirements for Nuclear Facility Applications, Part I, "Requirements for Quality Assurance Programs for Nuclear Facilities".
- ASME NQA-1-2000, Part II, Subpart 2.7, "Quality Assurance Requirements for Computer Software for Nuclear Facility Applications", including problem reporting and corrective action.
- ASME NQA-1-2000, Part IV, Subpart 4.2, "Guidance on Graded Application of Quality Assurance (QA) for Nuclear-Related Research and Development".

The PNNL Quality Assurance Program Description / Quality Management M&O Program Description describes the Laboratory-level QA program that applies to all work performed by PNNL. Laboratory-level procedures for implementing the QA requirements described in the standards identified above are deployed through PNNL's web-based "How Do I…?" (HDI) system, a standards-based system for managing and deploying requirements and procedures to PNNL staff. The HDI procedures (called Workflows and Work Controls) provide detailed guidance for performing some types of tasks, such as protecting classified information and procuring items and services, as well as general guidelines for performing research-related tasks, such as preparing and reviewing calculations and calibrating and controlling measuring and test equipment.

The technology maturity of the work is considered scoping in nature, and the NUCON project will be using PNNL HDI to meet the Basic Research requirements of PNNL's institutional QA Program, with additional rigor as stated in the project's Quality Assurance Plan (71248-QA-001). This is based on the revised WRPS Quality Assurance Requirements (QAR) form, revision 1a, signed 2/5/2018 by WRPS Quality Engineer.

11. Reporting

Upon completion of testing, reporting will include the following:

- DRAFT final test report – 12 weeks after completion of all testing
- Final test report – 15 weeks after completion of all testing

Appendix A. Hanford Tank Farm Chemicals of Potential Concern and Associated Occupational Exposure Limits

COPC #	Chemical Name	CAS #	OEL
1	1,1'-Biphenyl	92-52-4	0.2 ppm
2	1,3-Butadiene	106-99-0	1 ppm
3	1,3-Dinitrate-1,2,3-propantriol	623-87-0	0.05 ppm
4	1,4-Butanediol dinitrate	3457-91-8	0.05 ppm
5	1-Butanol	71-36-3	20 ppm
6	2,4-Dimethylpyridine	108-47-4	0.5 ppm
7	2,4-Pentadienenitrile	1615-70-9	0.3 ppm
8	2-Ethylhex-2-enal	645-62-5	0.1 ppm
9	2-Fluoropropene	1184-60-7	0.1 ppm
10	2-Hexanone	591-78-6	5 ppm
11	2-Methylbut-2-enal	1115-11-3	0.03 ppm
12	2-Methylene butanenitrile	1647-11-6	0.3 ppm
13	2-Nitro-2-methylpropane	594-70-7	0.3 ppm
14	3-Buten-2-one	78-94-4	0.2 ppm
15	3-Methyl-3-buten-2-one	814-78-8	0.02 ppm
16	4-Methyl-2-hexanone	105-42-0	0.5 ppm
17	6-Methyl-2-heptanone	928-68-7	8 ppm
18	Acetaldehyde	75-07-0	25 ppm
19	Acetonitrile	75-05-8	20 ppm
20	Ammonia	7664-41-7	25 ppm
21	Benzene	71-43-2	0.5 ppm
22	Butanal	123-72-8	25 ppm
23	Butanenitrile	109-74-0	8 ppm
24	Butyl nitrate	928-45-0	8 ppm
25	Butyl nitrite	544-16-1	0.1 ppm
26	Chlorinated biphenyls	---	0.03 mg/m^3
27	Dibutyl butylphosphonate	78-46-6	0.007 ppm
28	Diethyl phthalate	84-66-2	5 mg/m^3
29	Ethylamine	75-04-7	5 ppm
30	Formaldehyde	50-00-0	0.3 ppm
31	Furan	110-00-9	0.001 ppm
32	2,3-Dihydrofuran	1191-99-7	0.001 ppm
33	2,5-Dihydrofuran	1708-29-8	0.001 ppm
34	2-Methylfuran	534-22-5	0.001 ppm
35	2,5-Dimethylfuran	625-86-5	0.001 ppm
36	2-Ethyl-5-methylfuran	1703-52-2	0.001 ppm
37	4-(1-Methylpropyl)-2,3-dihydrofuran	34379-54-9	0.001 ppm
38	3-(1,1-Dimethylethyl)-2,3-dihydrofuran	34314-82-4	0.001 ppm
39	2-Pentylfuran	3777-69-3	0.001 ppm
40	2-Heptylfuran	3777-71-7	0.001 ppm
41	2-Propylfuran	4229-91-8	0.001 ppm
42	2-Octylfuran	4179-38-8	0.001 ppm
43	2-(3-Oxo-3-phenylprop-1-enyl)furan	717-21-5	0.001 ppm
44	2-(2-Methyl-6-oxoheptyl)furan	51595-87-0	0.001 ppm
45	Heptanenitrile	629-08-3	6 ppm
46	Hexanenitrile	628-73-9	6 ppm
47	Mercury	7439-97-6	0.025 mg/m^3
48	Methanol	67-56-1	200 ppm
49	Methyl isocyanate	624-83-9	0.02 ppm
50	Methyl nitrite	624-91-9	0.1 ppm
51	Nitrous oxide (N2O)	10024-97-2	50 ppm
52	N-Nitrosodiethylamine	55-18-5	0.0001 ppm
53	N-Nitrosodimethylamine	62-75-9	0.0003 ppm
54	N-Nitrosomethylethylamine	10595-95-6	0.0003 ppm
55	N-Nitrosomorpholine	59-89-2	0.0006 ppm
56	Pentanenitrile	110-59-8	6 ppm
57	Propanenitrile	107-12-0	6 ppm
58	Pyridine	110-86-1	1 ppm
59	Tributyl phosphate	126-73-8	0.2 ppm
60	Dimethylmercury	593-74-8	0.01 mg/m^3
61	2-Propenal	107-02-8	0.1 ppm

Appendix B. VAU Master Test Matrix

Test	COPC name	CAS	Conc [ppm]	Evaluation	CGB Flow [SLPM]	Bubbler Flow [SLPM]	COPC Injection Port
0.1	(multiple)	(multiple)	(n/a)	Shakedown - baseline air	(n/a)	(n/a)	(n/a)
0.2	(multiple)	(multiple)	(n/a)	Shakedown - baseline engine	(n/a)	(n/a)	(n/a)
1.1.a	Acetaldehyde	75-07-0	2.5	Detection	15.0	(n/a)	SP 515
1.1.b	Acetonitrile	75-05-8	2	Detection	9.97	(n/a)	SP 515
1.2.a	Acetaldehyde	75-07-0	50	DRE	(n/a)	0.059	SP 517-9
1.2.b	Acetonitrile	75-05-8	40	DRE	(n/a)	0.506	SP 517-9
1.3.a	Acetaldehyde	75-07-0	(no test)	(no test)	(no test)	(no test)	(no test)
1.3.b	Acetonitrile	75-05-8	(no test)	(no test)	(no test)	(no test)	(no test)
2.1.a	Benzene	71-43-2	0.05	Detection	0.374	(n/a)	SP 515
2.1.b	Propanenitrile	107-12-0	0.6	Detection	5.98	(n/a)	SP 515
2.2.a	Benzene	71-43-2	1	DRE	5.8	(n/a)	SP 517-9
2.2.b	Propanenitrile	107-12-0	12	DRE	93.4	(n/a)	SP 517-9
2.3.a	Benzene	71-43-2	(no test)	(no test)	(no test)	(no test)	(no test)
2.3.b	Propanenitrile	107-12-0	(no test)	(no test)	(no test)	(no test)	(no test)
3.1.a	1,3-Butadiene	106-99-0	0.1	Detection	1.50	(n/a)	SP 515
3.1.b	Formaldehyde	50-00-0	0.03	Detection	1.50	(n/a)	SP 515
3.1.c	2,4-Dimethylpyridine	108-47-4	0.05	Detection	14.96	(n/a)	SP 515
3.2.a	1,3-Butadiene	106-99-0	3.4	DRE	39.8	(n/a)	SP 517-9
3.2.b	Formaldehyde	50-00-0	0.6	DRE	23.4	(n/a)	SP 517-9
3.2.c	2,4-Dimethylpyridine	108-47-4	1	DRE	(n/a)	0.282	SP 517-9
3.3.a	1,3-Butadiene	106-99-0	(no test)	(no test)	(no test)	(no test)	(no test)
3.3.b	Formaldehyde	50-00-0	(no test)	(no test)	(no test)	(no test)	(no test)
3.3.c	2,4-Dimethylpyridine	108-47-4	(no test)	(no test)	(no test)	(no test)	(no test)
4.1.a	N-Nitrosodimethylamine	62-75-9	0.00003	Detection	0.045	(n/a)	SP 515
4.2.a	N-Nitrosodimethylamine	62-75-9	0.0006	DRE	0.700	(n/a)	SP 517-9
4.3.a	N-Nitrosodimethylamine	62-75-9	0.062	DRE	72.3	(n/a)	SP 517-9
5.1.a	Furan	110-00-9	0.0001	Detection	0.150	(n/a)	SP 515
5.2.a	Furan	110-00-9	0.002	DRE	2.34	(n/a)	SP 517-9
5.3.a	Furan	110-00-9	0.017	DRE	19.5	(n/a)	SP 517-9
6.1.a	Ammonia	7664-41-7	2.5	Detection	0.125	(n/a)	SP 515
6.1.b	Nitrous Oxide	10024-97-2	5	Detection	0.249	(n/a)	SP 515
6.2.a	Ammonia	7664-41-7	50	DRE	1.95	(n/a)	SP 517-9
6.2.b	Nitrous Oxide	10024-97-2	100	DRE	3.89	(n/a)	SP 517-9
6.3.a	Ammonia	7664-41-7	630	DRE	24.5	(n/a)	SP 517-9
6.3.b	Nitrous Oxide	10024-97-2	831	DRE	32.4	(n/a)	SP 517-9
7.1.a	Acetonitrile	75-05-8	40	Multi-component DRE	(n/a)	0.506	SP 517-9
7.1.b	2,4-Dimethylpyridine	108-47-4	1	Multi-component DRE	(n/a)	0.282	SP 517-9
7.1.c	Ammonia	7664-41-7	630	Multi-component DRE	24.5	(n/a)	SP 517-9
7.1.d	Nitrous Oxide	10024-97-2	100	Multi-component DRE	3.89	(n/a)	SP 517-9
7.1.e	N-Nitrosodimethylamine	62-75-9	0.062	Multi-component DRE	72.3	(n/a)	SP 517-9
7.1.f	Furan	110-00-9	0.017	Multi-component DRE	19.5	(n/a)	SP 517-9

Appendix C. VAU Master Sample Matrix

Test	COPC name	CAS	PTR-MS	Precon/ PTR-MS	FT-IR	AreaRAE Multi-Gas	GC/MS	Particulate	Canister Sample (e.g., SUMMA)	DNPH Treated Silica Gel, SKC-226-119	Thermosorb/N	TDU Tenax TA	Anasorb 747 (sulfuric acid) SKC-226-29
0.1	All 11 Test COPCs	(multiple)		SP 521	SP 521	SP 521							
0.2	All 11 Test COPCs	(multiple)	SP 516	SP 516	SP 516	SP 516							
1.1	Acetonitrile Acetaldehyde	75-05-8 75-07-0	SP 516		SP 516								
1.2	Acetonitrile Acetaldehyde	75-05-8 75-07-0	SP 521 SP 516		SP 521 SP 516	SP 521 SP 516		SP 525 SP 514	SP 521 SP 525 SP 514 SP 516				
2.1	Benzene Propanenitrile	71-43-2 107-12-0	SP 516		SP 516								
2.2	Benzene Propanenitrile	71-43-2 107-12-0	SP 521 SP 516		SP 521 SP 516	SP 521 SP 516		SP 525 SP 514	SP 521 SP 525 SP 514 SP 516				
3.1	1,3-Butadiene Formaldehyde 2,4-Dimethylpyridine	106-99-0 50-00-0 108-47-4	SP 516										
3.2	1,3-Butadiene Formaldehyde 2,4-Dimethylpyridine	106-99-0 50-00-0 108-47-4	SP 521 SP 516			SP 521 SP 516		SP 525 SP 514	SP 521 SP 525 SP 514 SP 516	SP 521 SP 525 SP 514 SP 516			
4.1	N-Nitrosodimethylamine	62-75-9		SP 516									
4.2	N-Nitrosodimethylamine	62-75-9	SP 521	SP 516		SP 521 SP 516		SP 525 SP 514			SP 521 SP 525 SP 514 SP 516		
4.3	N-Nitrosodimethylamine	62-75-9	SP 521	SP 516		SP 521 SP 516		SP 525 SP 514			SP 521 SP 525 SP 514 SP 516		
5.1	Furan	110-00-9		SP 516									
5.2	Furan	110-00-9	SP 521	SP 516		SP 521 SP 516		SP 525 SP 514				SP 521 SP 525 SP 514 SP 516	
5.3	Furan	110-00-9	SP 521	SP 516		SP 521 SP 516		SP 525 SP 514				SP 521 SP 525 SP 514 SP 516	
6.1	Ammonia Nitrous Oxide	7664-41-7 10024-97-2			SP 516								
6.2	Ammonia Nitrous Oxide	7664-41-7 10024-97-2			SP 521 SP 516	SP 521 SP 516		SP 525 SP 514	SP 521 SP 525 SP 514 SP 516				SP 521 SP 525 SP 514 SP 516
6.3	Ammonia Nitrous Oxide	7664-41-7 10024-97-2			SP 521 SP 516	SP 521 SP 516		SP 525 SP 514	SP 521 SP 525 SP 514 SP 516				SP 521 SP 525 SP 514 SP 516
7.1	Acetonitrile 2,4-Dimethylpyridine Ammonia Nitrous Oxide N-Nitrosodimethylamine Furan	(multiple)	SP 521 SP 516	SP 516	SP 521 SP 516	SP 521 SP 516							