AirSentry FTIR

Open Path Multi-gas Analyzer

Cost Effective Perimeter & LDAR Monitoring

Acids

VOCs, SVOCs

Fluorocarbons, CFCs

Solvents

Hydrocarbons

Combustion Gases

GHGs

Organics

USEPA TO-16 Regulatory Compliant Monitoring: 385 Compounds, 100+ HAPs

Direct SAFER Systems Integration

MODBUS TCP Integration

VNC Remote Control

Part per Billion Sensitivity

Automated Reporting

Automated Alarms

Simple .csv or .txt Data Logging

Easily configured for your application

Tripod mount or fixed installation

Optional Hazardous Location Hardware

CONTACT:

Cerex Monitoring Solutions, LLC.
1816 Briarwood Industrial Ct. Ste D
Atlanta, GA. 30329
678-570-6662

...In Real Time

CEREX MONITORING SOLUTIONS
www.cerexms.com

Cost Effective Perimeter and LDAR Monitoring

Multi-Compound Detection Capabilities

Offering real time quantification of multiple compounds, the Cerex AirSentry FTIR provides a cost effective multi-component perimeter fugitive emissions or LDAR monitoring solution. Monitoring as few as two gases with the AirSentry FTIR often results in lower initial and lower ongoing operational costs than utilization of competing gas detection technologies, while simultaneously delivering reliable U.S.E.P.A. TO-16 regulatory compliant air quality monitoring. The AirSentry FTIR is offered fully configured to meet the requirements of your air quality monitoring application. Target gases are selected from Cerex's library of 385 compounds. Changing target gases is as simple as copy and paste.

Enhanced Early Detection Performance

Low PPB detection limits and wide dynamic ranges enhance early leak detection and release characterization in real time. Concentrations of gases below the detection thresholds of traditional sensor arrays are detectable with the AirSentry FTIR. Early detection translates into quicker response times, reduced impact and decreased plant downtime. Clear down is immediate, and the analyzer cannot be poisoned.

CEREX MONITORING SOLUTIONS
www.cerexms.com

Cerex Monitoring Solutions, LLC.
1816 Briarwood Industrial Court, Suite D
Atlanta, GA. 30329
678-570-6662

Low Maintenance Costs, Increased Uptime

The AirSentry FTIR is designed for autonomous operation and a twenty year service life. Units produced in 1994 are still operational today. The analyzer uses a cryocooled MCT detector which mitigates the requirement for costly liquid nitrogen handling and ensures continuous operation. Only two consumable items: The IR source and the MCT detector cryocooler compressor. Both consumables have three year service intervals. Air conditioning increases longevity of electronics. Optical surfaces are coated to reduce corrosion. Inherent calibration eliminates the need for time consuming and expensive routine calibration. Quality assurance audits require only small quantities of primary standard gas.

Low Cost Installation and Integration

For many installations complete perimeter monitoring may be achieved with only two power and communication installation locations. MODBUS TCP and VNC via Ethernet are standard communication and remote control protocols.

Direct Integration with SAFER Systems Modeling

The AirSentry FTIR seamlessly integrates with SAFER Systems' emergency response software. SAFER's patented software is used in conjunction with Cerex hardware in several different ways; pre-emergency for preparation and training, during an emergency for emergency response, and post-emergency for future event mitigation, regulatory reporting, and litigation response. The complete solution utilizes live streaming data from on-site weather stations and Cerex gas detection sensors to generate a visualized model of the chemical plumes or soot clouds released during an emergency. The models automatically update as weather/sensor data changes so that emergency response teams know who or what will be impacted by the emergency (whether on-site or off-site), who needs to be evacuated or shelter in place, and how long the event will last. In the case of highly flammable chemicals, the models show where the combustion particulates will be deposited as well as the chemical composition of the soot clouds. All of the models and data are archived so they can be used for post-emergency analysis of the event, in response to odor complaints and litigation, and for reporting to regulatory agencies when needed. Not only can response teams use pre-defined scenarios prior to an emergency, but they can also use the archived data and models to base their emergency drills and training on actual events that may have occurred.

Flexibility for Open Path and Point Monitoring

For monitoring projects which require the flexibility for open path and point monitoring, the AirSentry FTIR may be quickly converted from an open path analyzer to a point analyzer by replacing the telescope with an optional multi-pass sample cell.

Core Data Acquisition and Integrated Meteorological Monitoring

With optional inputs the AirSentry FTIR may be configured to acquire and integrate data from ancillary analyzers and meteorological monitoring hardware to offer definitive records of site conditions.

Open Path FTIR Principle of Operation

The Cerex AirSentry FTIR operates by sending a beam of Infrared light through the open air. The IR beam is reflected back to the analyzer by a retro-reflector array (mono-static), where the absorption due to target gases is measured and recorded. The analyzer uses a classical least squares regression analysis to compare the measured absorption spectrum to calibrated reference absorption spectra files per USEPA TO-16 Methodology. Beer's Law is used to report accurate gas concentrations.

Mono-static Design and Installation

The AirSentry FTIR mounts to a precision pan and tilt head which may be used with a tripod for rapid deployment, or with a fixed mount for permanent installations. The retro-reflector array is housed in a NEMA enclosure and may be tripod or fixed mounted to a mast, pole or superstructure. Monitoring path lengths are typically configured to meet minimum detection limits required for the project. Paths to 1 Km are possible. The IR beam is eye-safe and the analyzer may be located directly in the breathing zone. Gases present in the beam path are identified and quantified in near real time.

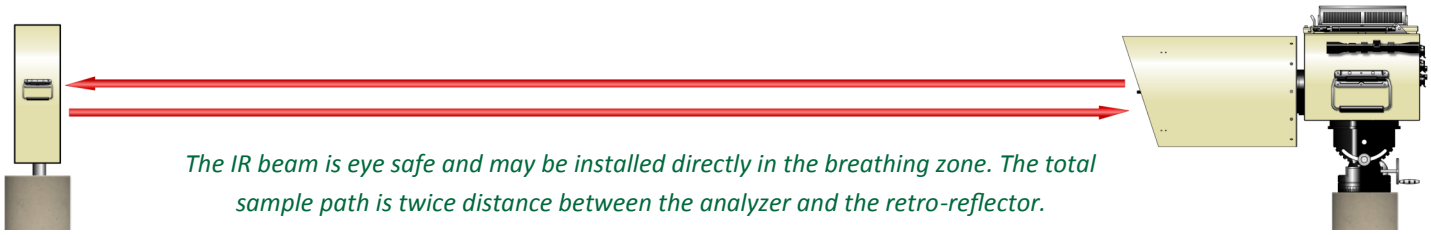

The IR beam is eye safe and may be installed directly in the breathing zone. The total sample path is twice distance between the analyzer and the retro-reflector.

Coated optics provide the greatest possible longevity.

Power, communications and overhead shelter are only required at the analyzer end of the monitoring path.

AirSentry FTIR Features

Software and hardware features are specifically designed to simplify integration , automate operation and reduce maintenance. Tedious calibrations are unnecessary and the use of synthetic background functionality allows continuous and accurate quantification of gases that are always present without the need for complex background acquisition procedures.

- Integrated Computer with Windows®
- Integrated WiFi , LAN, USB
- MOBUS TCP and Ethernet VNC Networking
- Inherent calibration: No need for ongoing calibrations
- Automated background acquisition
- Automated synthetic background implementation
- Cryocooled MCT detector eliminates need for Liquid Nitrogen
- User configurable alarms and data acquisition rate
- User configurable resolution
- Simultaneous multi-gas detection capabilities
- Part per billion minimum detection limits (gas specific)
- Integrated instrument air conditioning

CEREX MONITORING SOLUTIONS
www.cerexms.com

Cerex Monitoring Solutions, LLC.
1816 Briarwood Industrial Court, Suite D
Atlanta, GA. 30329
678-570-6662

Common Options

AirSenty FTIR Options

- Integrated Meteorological Monitoring
- Analog inputs, integrated data logging
- Collocated Particulate Monitoring
- Serial Modbus, 4-20mA, 0-5VDC
- RS-232, 422, 485 output
- USB Cellular Modem or RF Modem
- Internal Flow Through QA Cell
- External Multi-pass Cell
- Extended Temperature Range
- Alarm driven control outputs
- HAZLOC Z-Purge, Air Conditioning
- Automated Multi-path Scanner

Cellular Modem provides remote access to user interface, data and alarms

Consumables

Three Year Service Interval

The AirSentry FTIR has only two consumable components : The Cryocooler Compressor and the Infrared Source.

Chosen for long life, the Cryocooler Compressor has a 20,000 hour MTTF . Routine maintenance is to replace the compressor and IR source every three years.

AirSentry FTIR Typical Minimum Detection Limits of Commonly Requested Gases: 300 Meter Path

Compound	PPB	Compound	PPB	Compound	PPB	Compound	PPB
Acetaldehyde	2.0	Cyclohexene	2.4	Hydrogen Sulfide	1500.0	Octane	0.8
Acetic Acid, monomer	4.7	Cyclopentene	4.3	Isobutane	2.5	Ozone	2.2
Acetone	9.7	Cyclopropane	6.7	Isobutanol	1.1	n-Pentane	2.8
Acetonotrile	43.3	1,2 Dibromoethane	7.7	Isobutylene	1.4	1-Pentene	3.3
Acetl Chloride	2.2	m-Dichlorobenzene	4.0	Isoctane	2.0	2-Pentene	5.0
Acetylene	2.6	o-Dichlorobenzene	3.1	Isoprene	1.5	trans-3-Pentene nitrile	2.0
Acrolein	2.8	Dichlorodifluoromethane	0.7	Isopropanol	3.7	Phosgene	0.7
Acrylic Acid	1.5	1,1 Dichloroethane	3.7	Mesitylene	3.1	Phosphine	9.0
Acrylonitrile	5.0	1,2 Dichloroethane	24.3	Methane	11.7	Propane	6.3
Ammonia	0.7	1,1 Dichloroethene	2.3	Methanol	1.4	Propionaldehyde	1.6
Aniline	13.0	1,2 Dichloroethene	6.7	Methyl Acetate	2.7	Propionic Acid	7.3
Arsine	5.7	Dichloromethane	4.3	Methyl Acrylate	2.2	Propylene	4.7
Benzene	110	1,2 Dichlorotetrafluorethane	0.7	Methylamine	9.7	Propylene Oxide	7.3
Bis-dichloroethylether	2.3	Diethyl Ether	0.9	2-Methyl 2-Butene	15.7	Silicon Tetrafluoride	0.7
Boron Trichloride	0.7	Dimethylamine	2.4	3-Methyl 1-Butene	5.3	Styrene	4.0
Bromomethane	27.3	Dimethyl Ether	3.0	Methyl Formate	5.0	Sulfur Dioxide	15.0
Butadiene	3.1	1,1 Dimethyl Hydrazine	1.2	Methyl Methacrylate	2.2	Sulfur Hexafluoride	0.7
n-Butane	7.0	Dimethyl Sulfide	1.0	Methyl Nitrite	2.2	1,1,1,2 Tetrachloroethane	1.3
2-Butanone	7.0	Ethane	5.3	2-Methyl Pentane	3.7	1,1,1,2 Tetrachloroethane	133.3
Carbon Dioxide	43.7	Ethanol	3.0	3-Methyl Pentane	2.0	Tetrachloroethene	0.7
Carbon Disulfide	11.3	Ethyl Benzene	11.3	2-Methyl 1-Pentene	5.7	Tetrahydrothiophene	3.0
Carbon Monoxide	4.3	Ethylene	2.1	2-Methyl 2-Pentene	3.0	Toluene	11.3
Carbon Tetrachloride	0.8	Ethylene Oxide	3.7	4-Methyl 2-Pentene	4.0	1,1,1 Trichloroethane	1.8
Carbon Tetrafluoride	0.7	Ethyl Vinyl Ether	4.0	Methyl Vinyl Ether	4.7	1,1,2 Trichloroethane	4.7
Carbonyl Sulfide	1.6	Fluorobenzene	5.7	Methyl Vinyl Ketone	6.3	Trichloroethene	0.8
Chlorobenzene	5.0	Formaldehyde	1.5	Nitric Acid	2.1	Trichlorofluormethane	0.7
Chlorodifluoromethane	0.7	Formic Acid, Monomer	2.6	Nitric Acid	76.7	Trochlorotrifluoroethane	0.7
Crotonaldehyde	2.5	Furan	3.7	Nitro Benzene	4.3	Vinyl Acetate	2.5
Chloroethane	6.7	n-Hexane	1.5	Nitro Ethane	10.0	Vinyl Chloride	5.3
Chloroform	0.8	Hydrogen Bromide	4.0	Nitrogen Dioxide	9.7	Vinylidene Chloride	2.3
Chloromethane	31.3	Hydrogen Chloride	2.0	Nitro Methane	27.0	m-Xylene	5.0
Chlorotrifluoromethane	2.0	Hydrogen Cyanide	22.7	Nitrous Acid	0.7	o-Xylene	9.0
Cyclohexane	0.7	Hydrogen Fluoride	0.7	Nitrous Oxide	6.3	p-Xylene	4.7

AirSentry FTIR Multi-Gas Analyzer Specifications

Analyzer	AirSentry FTIR
Application	Open Path Mono-static Multi-Gas FTIR Analyzer
Installation	
Analyzer Dimensions	23.27” X 42.11” X 21.93”
Mounting	Pan and Tilt Head via Dovetail for Tripod or Fixed Mount
Power	120 or 240VAC, Single Phase 50-60Hz , 4A Max
Networking	Sealed LAN, WAN and USB Ports, optional cellular modem, optional radio modem
Operating Temperature	°C to +55°C
Operating Humidity	0-80% NC
Sample Path Length	5-1000 Meters Open Path
Detector	Cryocooled MCT Photodetector
Performance	
Spectral Resolution	User Selectable: 1,4, 8, 16 , 32, 64 wavenumber
Spectral Range	2—14 Micron
Dynamic Range	Application Specific
Background Drift (TYP)	< 2% FS / 24hr, Self-Compensating
Linearity Drift (TYP)	< 2%, Self-Compensating
Accuracy	Application Specific: TYP <3.5% FS
Calibration	Inherent, optional QA cells available
Regulatory Approvals	USEPA Method TO-16 Compliant
Data Output	.CSV or .TXT via Ethernet and WiFi, MODBUS
Data Output Options	4-20mA, 0-5VDC, RS-232, 422, 485, RF Stream, MODBUS RTU, Email
Alarms	User configurable concentration and TLV averaged concentration alarm functionality
Maintenance	
IR Source Life	3 Years
Cryocooler MTTF	20,000 Hours

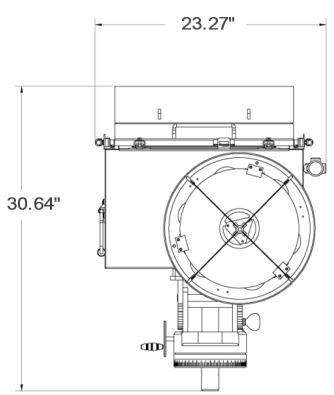

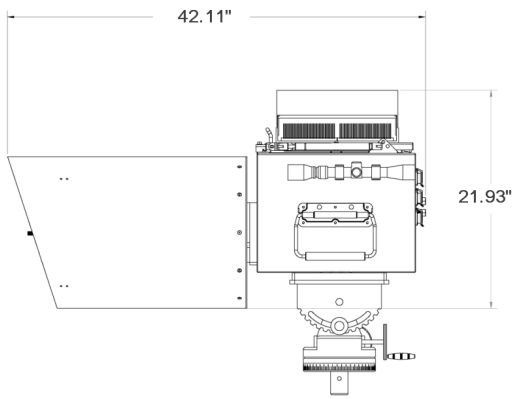

Call for a technology demonstration +1 678-570-6662

CEREX MONITORING SOLUTIONS
www.cerexms.com

CEREX
MONITORING SOLUTIONS, LLC.

Regulatory Compliance
USEPA Method TO-16

Individual gas species detection

Data and alarms can automatically be sent to email addresses, website or control room.

Analog outputs available (4-20ma, VDC)

Inherent calibration
No ongoing calibration required.

Synthetic Background
Eliminates need for clean air background acquisition.

User-configurable alarms

Fail to safe operation

CONTACT:

Cerex Monitoring Solutions
1816 Briarwood Industrial Court, Suite D
Atlanta, GA. 30329
678-570-6662
www.cerexms.com